FENCING THE PROVEN WAY

WIREMARK®

Brought to you by the good people at:

THE ONLY 100%
NEW ZEALAND MADE
FENCING WIRE

CONTENTS

INTRODUCTION

A stock-proof fence that can withstand New Zealand's harsh conditions is essential. It is important to choose quality materials suited to the conditions and maintain a high standard of workmanship when constructing a fence.

The most common mistake in fence construction is erecting the wrong fence for its purpose. Ground contour and the type of stock the fence is designed to manage must be taken into account.

This booklet aims to help farmers by providing some recommended techniques for fence construction.

ORGANISING MATERIALS

Before you begin fence construction, ensure you have what you need. The following is a broad guide:

- strainer posts
- line posts
- footing materials
- stays
- Wiremark wire
- battens
- staples
- gates (if required)
- gudgeons (if required)
- gate catch (if required)

The exact quantity of materials required is difficult to determine as this will vary from fence to fence. For example, a boundary fence may require more wires to accommodate a greater range of stock applications.

Ask at your local rural supply merchant for information on quantities required.

For professional advice on all aspects of fence construction and fencing materials, call our technical team on **0800 WIREMARK** (0800 947 362), or the Fencing Contractors Association of New Zealand (FCANZ) on 0508 4 FCANZ (0508 4 32269).

WIREMARK®
NEW ZEALAND MADE
BY PACIFIC STEEL

FCANZ
Fencing Contractors Association NZ
Setting standards

CHOOSING YOUR MATERIALS

If you want a fence that will last the distance, use high quality materials designed to withstand New Zealand's diverse conditions.

POSTS

When buying posts there are three key things that you should look for:

Uniformity–all posts should be similar in shape and size.

Treatment–posts should be ground treated to meet the manufacturers' specifications.

Strength–Check that posts are free of knots, and check their density to ensure that they are durable.

WIRE

When buying wire check for the following:

Labelling–check the labelling to ensure that the wire has an adequate protective coating as this will determine the life span of the wire.

Ductility–the wire should be easy to handle and shouldn't tangle.

Suitability–check the gauge and tensile strength of the wire to ensure that you have the right wire for the type/purpose of the fence being constructed. Eg. 4mm heavy galvanised wire is suitable for equine fencing.

REMEMBER

WIREMARK® is the only 100% New Zealand Made fencing wire, so insist on using only locally made WIREMARK wire for all your fencing needs.

WHY THE WIREMARK?

The Wiremark is the only **100% New Zealand Made** wire and represents a mark of quality which endorses the wire as being made in New Zealand for our tough conditions.

Performance tested for strength and ductility, all wire that carries the **WIREMARK** has a protective coating that exceeds the New Zealand Fencing Wire Standard (NZS 3471) and ensures that the wire can withstand New Zealand conditions.

What's more, **WIREMARK** wire is easy to tie and won't tangle, saving you time and ensuring wire-handling is a breeze.

When you need wire, ask for the **WIREMARK** –to be confident you've got the right wire for New Zealand conditions.

ZINC-ALUMINIUM WIRE

Zinc-aluminium wires are designed for use in corrosive areas, such as coastal or sulphuric regions, or when fertilisers are used. Zinc-aluminum wires are coated with 5% aluminium and 95% zinc. The aluminium addition enhances the performance of the coating, making it more resilient to corrosion.

Zinc-aluminium wire will last up to four times longer than heavily galvanised wire when used in the same conditions.

Ask for zinc-aluminium wire that carries the **WIREMARK** label at your local rural supply store.

THE PROCESS OF FENCE CONSTRUCTION

There are many methods of fence construction. We've called on the experience of some of New Zealand's leading fencing contractors for tips on efficient and correct fence construction.

Before you begin your fence construction, walk the entire length of the fence noting any directional changes and the contour of the ground.

Fence construction begins with the installation of the end strainer assemblies and any angle posts. These should be installed so that they are firmly lodged in the ground.

Once the end strainer assemblies and angle posts have been correctly positioned, a guide wire should be run out and temporarily tensioned so that it is straight from point to point throughout its entire length. The guide wire will provide an accurate guide for the fence to follow, two wires can be used to ensure that posts are positioned vertically and in line. If one wire is positioned forward slightly, then that the post won't be straight. Leaving a gap of approximately 5mm between the guide wires and the posts should ensure every post will be straight along the fence line.

Mark the ground beside the guide wire where the line posts are to be installed. To ensure that the fence stays parallel to the ground, identify any changes in ground contour and alter post spacings accordingly.

The distance between line posts varies depending on the contour of the ground. Normal line post spacing is between 4 to 5 metres for a boundary fence.

Post installation begins with the main rise posts (highest points of the fence line) and the main dip posts (lowest points of the fence line). Once these have been installed and the guide wire(s) attached, the fencer can then install the other line posts correctly.

The chosen wire spacings or gauges, are then marked onto all posts. The remaining line wires are run out and attached to the main rise and dip posts. These should be the only posts that have all the line wires attached before tensioning.

Once all line wires are correctly tensioned and tied off, the remaining posts can be stapled, starting with any intermediate rise and dip posts.

Begin battening now if required. Battens must be set at an equal distance between posts; normal spacing is between 0.5m to 1.5m.

STRAINER ASSEMBLIES

Strainer posts mark the end/beginning of the fence and are considered the most important posts in the fence line. They carry the strain of the fence and support any gates if necessary.

Horizontal end assemblies are sometimes preferred to a diagonal stay when ground conditions are wet. Construction of Horizontal assemblies are outlined on page 30.

Before preparing the strainer hole, attention must be given to the surrounding ground contour, as this will determine the strainer position.

Strainers should be as straight as possible and without defect. The strainer length should typically be double the fence height. Strainers that are 200mm SED (small end diameter) by 2.4m long would suit most fences.

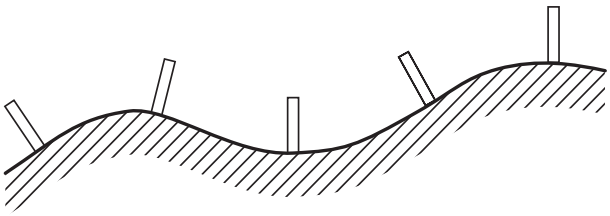

Strainers on flat ground should stand vertical and on sloping ground at 90° to the contour of the land. Angle and line posts should be placed in the same manner so they bisect the angle of the wires perfectly. Ensure the spacing of the wires remains consistent across the length of the fence line.

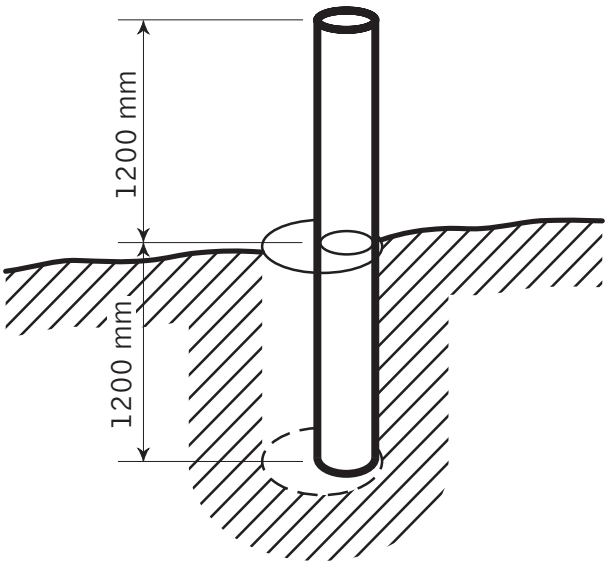

During construction, it is best to lay the strainer back slightly against the strain to allow for forward movement after tensioning.

When the hole is prepared, check for correct depth –it should be approximately half of the strainer length. Once the post has been dropped in, check for correct height and ensure it is standing against the stay side of the hole.

FOOTING THE STRAINER

Strainer posts must be firmly footed in the ground to ensure that they don't lift or rotate.

Foot size can vary depending on the type of ground. Usually the softer the ground, the bigger the foot. In firm ground two foots 380mm long x 100mm wide should be sufficient. Wire used for footing should be 4.0mm or 4.5mm heavy coat **WIREMARK** wire.

Two foots should be placed on either side of the strainer at the bottom of the hole. A block of timber should then be laid across the back of both foots, as this will add extra strength and prevent upwards movement.

CONSTRUCTION OF THE FOOT

The foot consists of a piece of ground treated timber with a 4.0mm or 4.5mm heavy coat **WIREMARK** wire stapled in the middle, on the underside of the foot.

1. The wire should be at right angles to the foot and well stapled.
2. Bend the wire around the foot and neatly wrap the short end around the long wire using a pair of pliers. The tails should be left long to avoid unravelling.
3. Straighten the long wire by running it through your hands, counter to the natural coil/curve of the wire, while you stand on the foot.

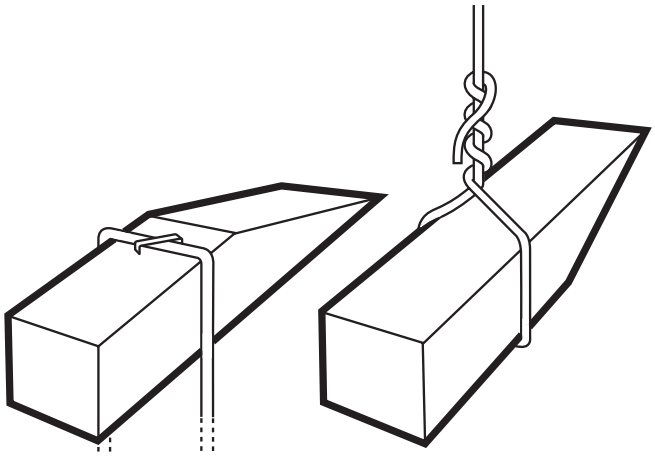

INSTALLING THE FOOT AND RAMMING

1. Place one foot beside the strainer so that it finishes flat against the bottom of the hole. Follow with the second foot on the other side.

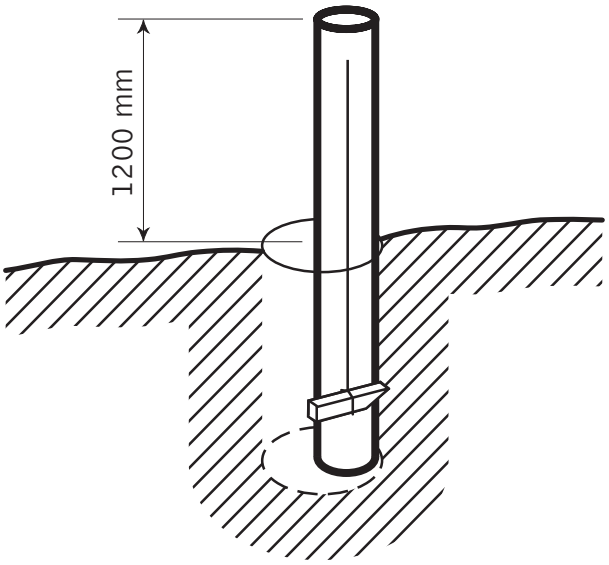

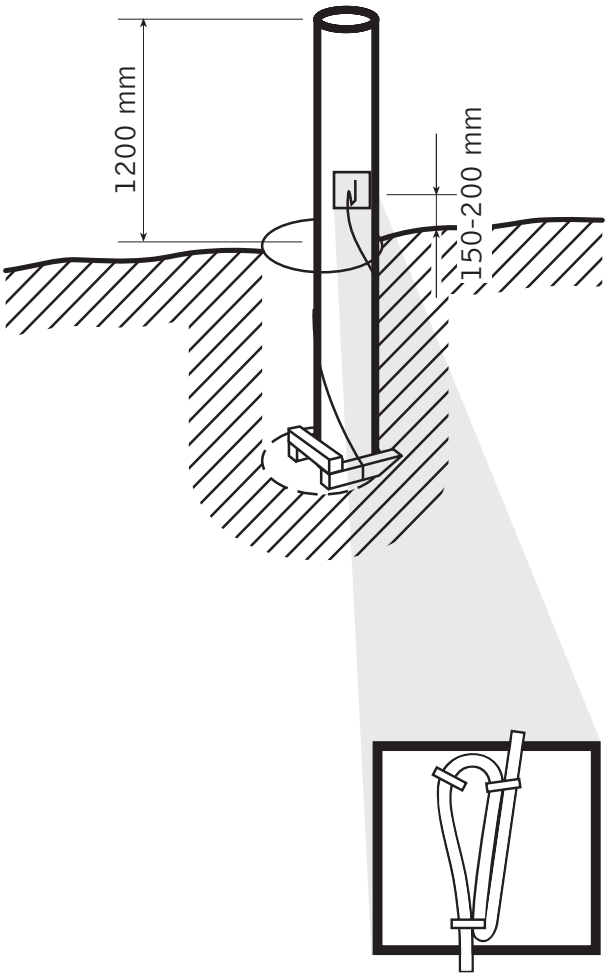

2. Check that the foot wires spiral half a turn around the strainer in the direction of anticipated movement, as this will avoid rotating and lifting –ie. if the line wires of the fence leave the right side of the strainer, the left foot wire should be fixed on the right side of the strainer.
3. Staple any wires clear off the ground to avoid corrosion.
4. Place a block of timber across the top of both foots at the back of the strainer. The timber block will tension the foot wires, increasing holding power and preventing backward movement.
5. Using one staple, staple the foot wires to the post approximately 150-200mm above the ground to ensure that the staples don't come into contact with the soil. The staple should be 45° across the wire and driven in firmly so that the wire has to be drawn through it under tension.
6. Check the foot to ensure that it is securely in place.
7. With the foot in place, ramming can now begin. Use four separate fillings as it is important that the soil around the foot is well compacted. While ramming, continue to check the strainer is in the desired position (flat against the front of the hole).
8. When ramming is complete, the desired wire gauge can be marked on the strainer. This should be done on both sides and will help ensure accurate and neat positioning of wires when tying off.

THE STAY

The stay is used to support the strainer against the strain of the line wires. The more wires, the more tension the stay must support.

A stay that is free of knots and measures 2400mm by 125 SED is recommended.

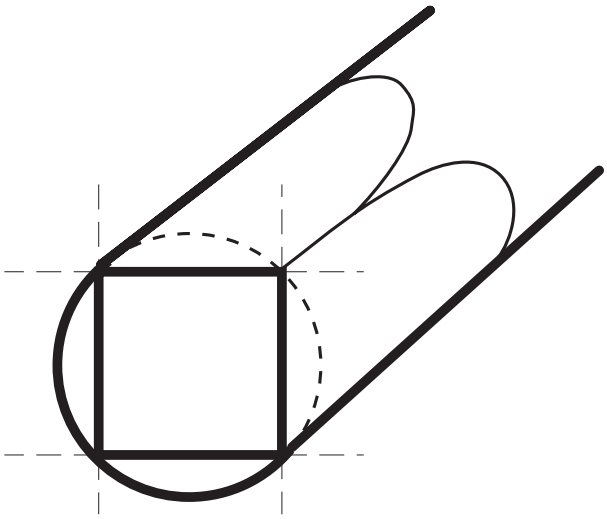

TRIMMING OF THE STAY

Care should be taken not to over trim the stay, as this gives less bearing area where contact is made.

A round stay should be trimmed to square at the end and taper out to 0 by about 250 to 300 millimetres. The exact length of trim is not too important.

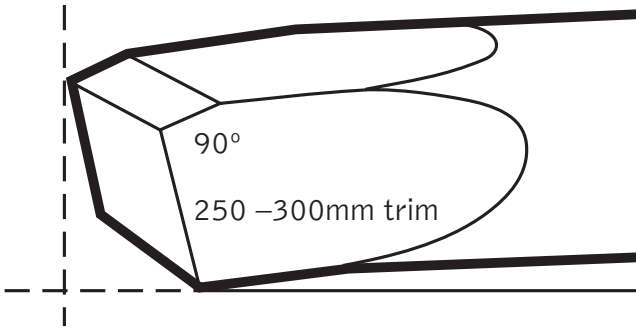

Once the stay has been trimmed, cut the bevel on the end. The bevel is a small angled face above the bearing surface of the stay, which acts as a support. The angle of the bevel cut will depend on the ground contour between the strainer and the stay block, the stay and mortise should fit flush. To achieve a flush finish, set the stay against the strainer in its final position, then lift the stay by the approximate burial distance of the block end of the stay, e.g. 20mm as shown in the diagram.

A parallel line should then be scribed into the stay using a flat rule/level to ensure it is accurate.

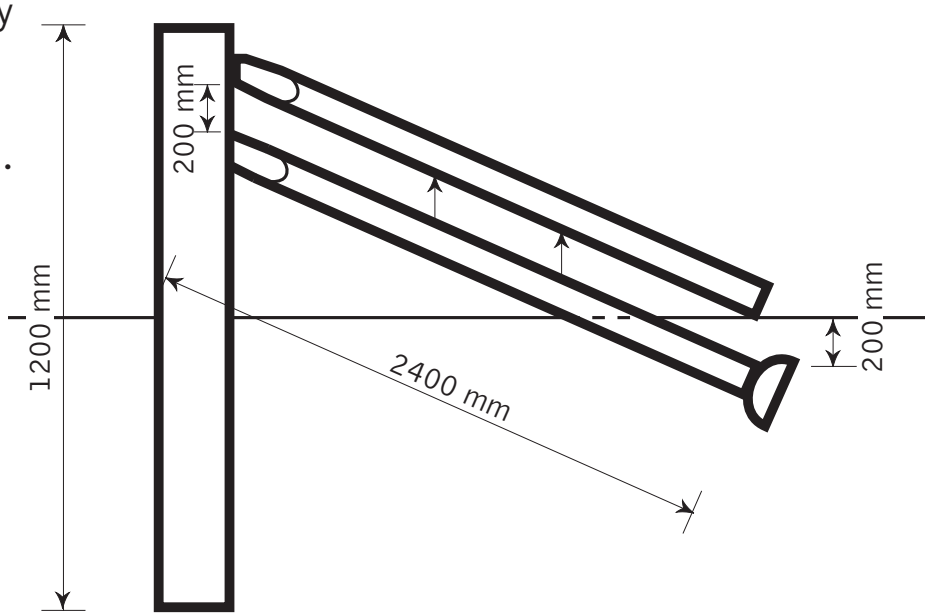

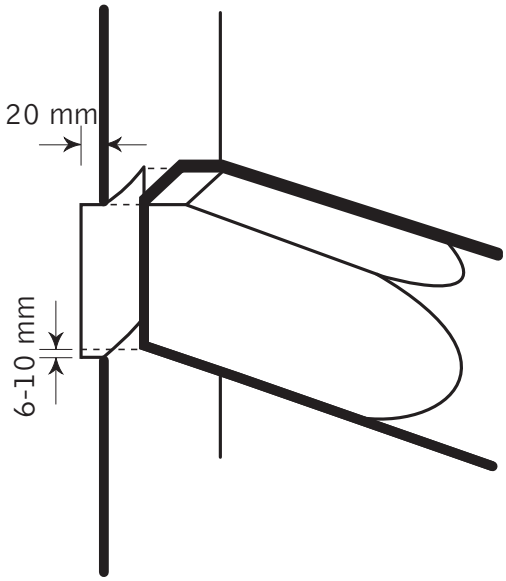

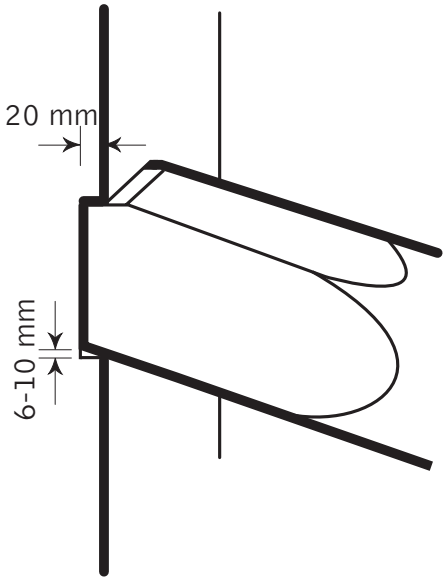

POSITION OF THE STAY

Opinions vary as to how high or low the stay should be on the strainers, but half way between the ground and top is suitable in most cases. A high stay will increase tension on the footing and low stay will put too much pressure on the stay block. The exact position is determined by the wire gauge and the size of the wires in use. The stay must not be in the way when tying the wires.

Once the height has been determined, rest the trimmed stay at this height and check to see it is in line with where the wires will run. To check the alignment of the stay either sight the already straightened, or tensioned guide wires, or stand behind the strainer and sight in the direction of the intended fence line. Careful sighting and lining of the stay is very important and if done incorrectly, may cause the mortice to be off centre, resulting in the twisting of the strainer.

The stay should be scribed to mark where the mortice needs to be chiselled out. This should be neatly done across and down each side, right against the stay, but about 6mm to 10mm underneath. This gap will be filled when the stay is put into the ground and is essential in preventing the splitting of the stay. Chisel out the mortice to about 20mm deep. Try the stay for fit and then realign as before. With the stay now fitted and in its correct line position, the stay block can be fitted.

FITTING OF THE STAY BLOCK

The stay block provides the stay with extra support by giving it a greater bearing surface where it comes into contact with the ground.

Failure of the stay block means strainer movement, wire tension loss and a non stock-proof fence. Choosing a suitable stay block will depend on the soil type –the softer the ground, the bigger the stay block will need to be.

Where the subsoil is firm, a 900mm by 200mm bearing surface is required. In soft ground, the length of the stay block should be increased.

With the stay in its exact position the stay block trench can be marked out. This will be positioned horizontally in the ground. The stay should hit the stay block at mid point to ensure the bearing is in the middle of the stay block and the stay doesn't twist once it comes under pressure.

Dig out the length of the block, and as deep as is necessary for it to be in stable ground. eg. subsoil.

Place the block in the trench and thump it several times along its length, as this will ensure it is well embedded and won't move during the final fitting.

Dig a sloping scarf to let the stay meet the block.

Insert the stay in the mortice and lower it onto the block. It should fit about half way across the block diameter.

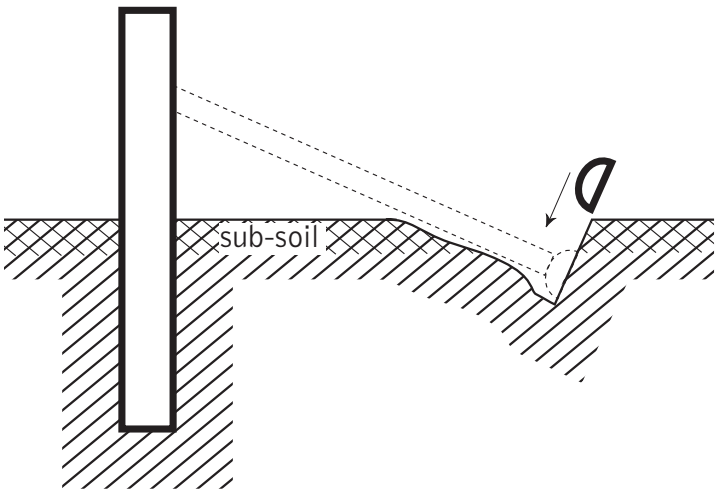

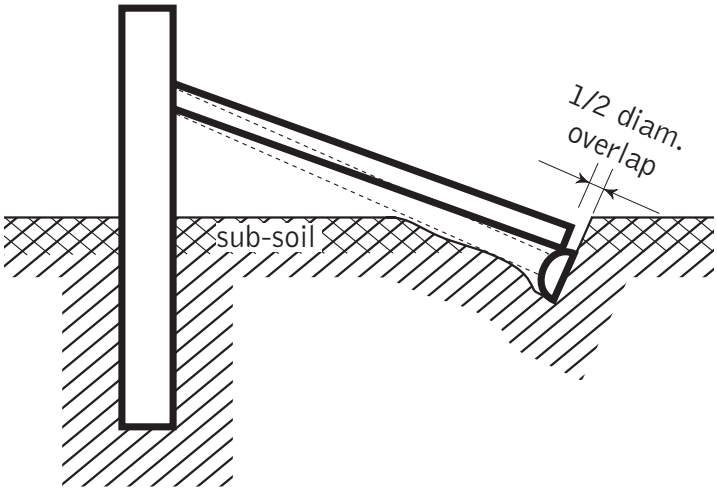

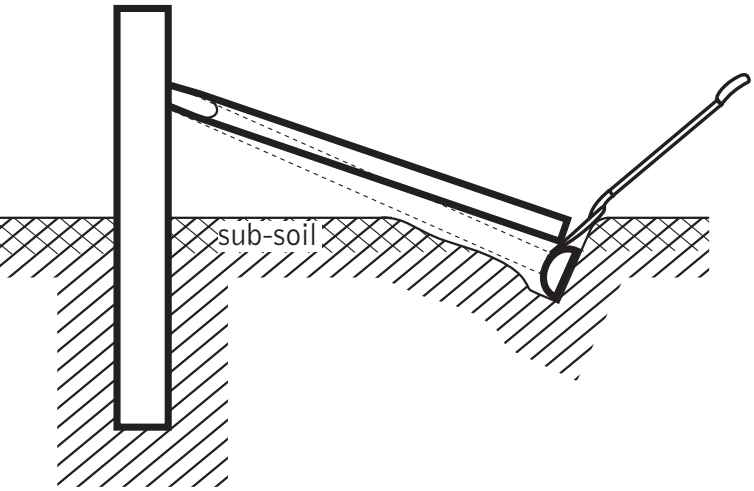

Raise it slightly and insert a spade in between the block face and the end of the stay. Use your foot to apply some weight to the stay and thump it down to halfway on the block using a rammer.

Remove the spade and centre the stay on the block face and in perfect line with the fence wires.

Cover in the block and turf it down neatly.

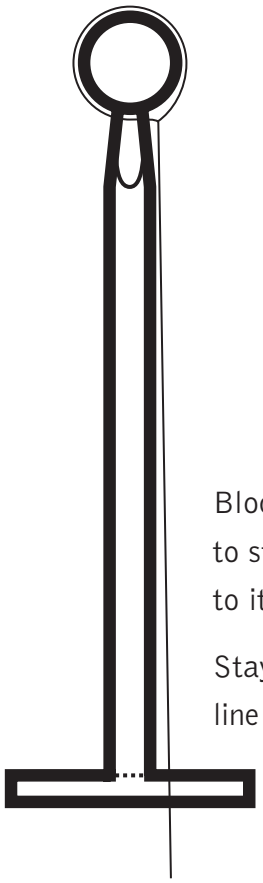

Block must be centred to stay and right angles to it.

Stay fitted in parallel line to fence wires

ANGLE POSTS

Angle posts are substantially-sized posts that define changes in the direction of the fence.

Angles of up to 45° can be sustained by a 2100mm post, however angles of 45°-90° are under a considerably higher amount of strain, so a more substantial 2400mm angle post should be used.

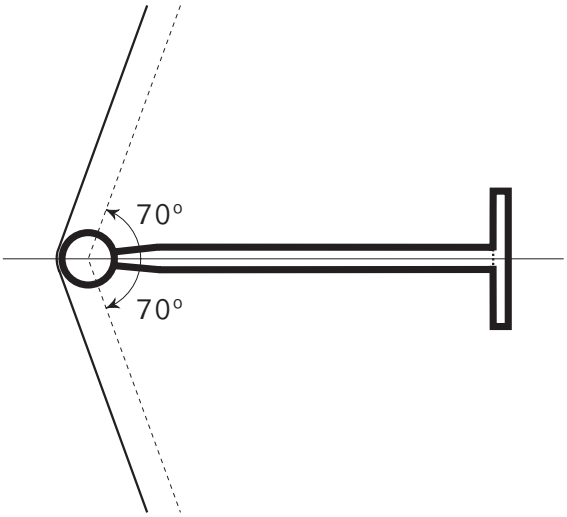

The installation of angle posts (angles) is similar to strainers. Contour, shape and footing remain the same, except that the foot wires are not spiralled but stapled directly above the foot.

It is recommended that the stay should be a little lower than half the height of the post as this deters stock, especially sheep, from rubbing under the stay and causing erosion.

The stay should bisect the angle created by the fence wires. This is important as it ensures that the weight and tension of the fence is balanced equally.

RISE AND DIP POSTS

Rise and dip posts define the high and low points in a fence line. Used only when needed, these posts hold the fence in line and counteract the upwards or downwards pull of the wires.

Rise posts should be set 25mm higher and dip posts should be placed 25mm lower to maintain bottom wire height. This will ensure ground clearance if the rise post should sink, or the dip posts should lift.

As dip posts are under a considerable amount of tension, they need to be firmly footed into the ground.

One of the more popular and frequently used methods of footing for dip posts is the swinging foot.

INSTALLING THE SWINGING FOOT

With your post in the hole and correctly positioned, ram around the bottom of the post to ensure that your rammer fits.

Bend the foot wire flat along the heel of the foot, so that it is parallel to the foot.

Place the foot alongside the post pointing downward and to the bottom front corner of the hole.

Tap the end to drive the point forward and under the front face of the hole. When the wire is about 25mm from the face of the hole, ram the foot neatly flat. At this stage, the heel should be 75mm off the bottom of the hole. This is important as it ensures the bottom of the post is well heeled and won't shift position when the foot is installed.

With one staple, staple the wire to the post above the ground. The staple should be 45° across the wire and driven in firmly so that the wire has to be drawn through under tension.

Now, finish the ramming of the foot flat to the bottom of the hole which will result in the tightening of the foot wire.

Fill the hole one quarter with earth and ram well.

Now staple off in an approved manner (outlined on page 10)

Ram the earth again as the stapling may have caused the post to loosen a little.

Check for contour, lean, and continue by ramming the remaining earth.

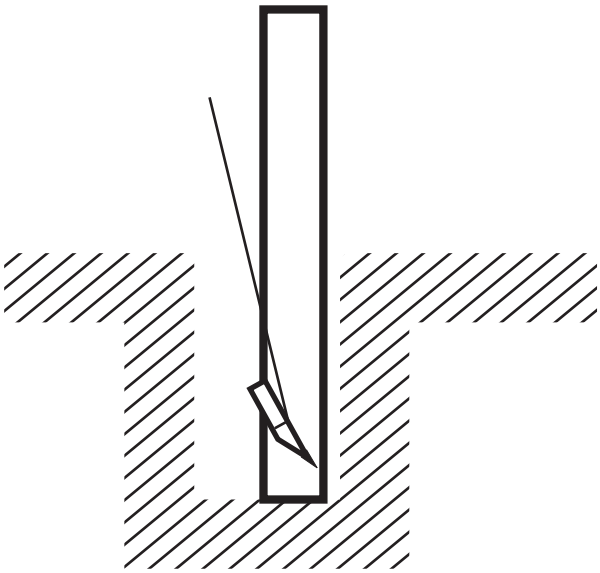

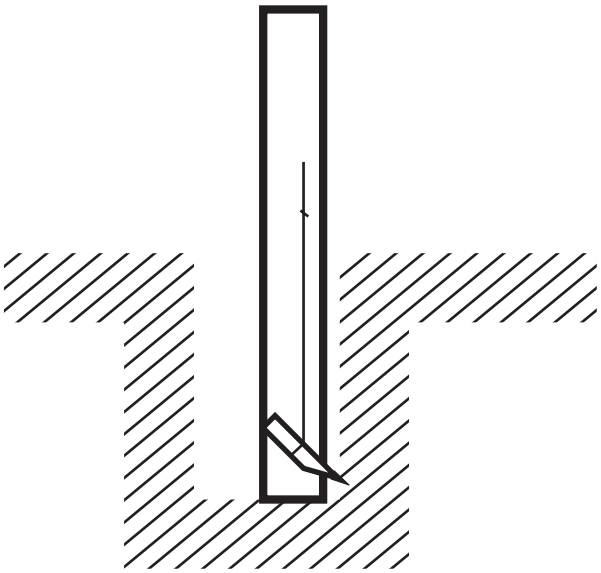

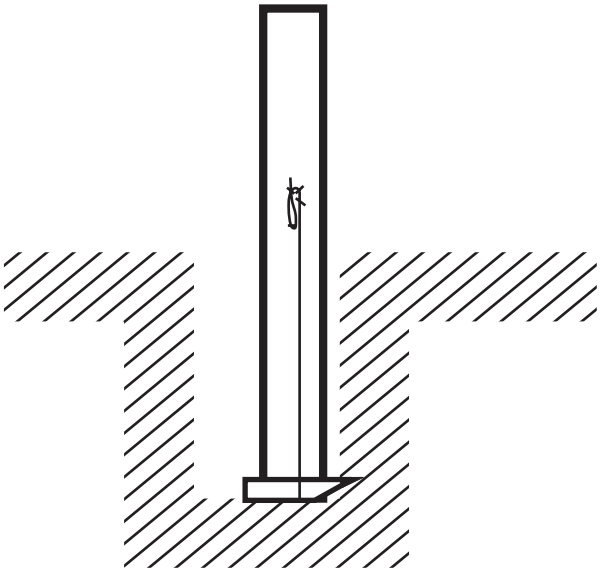

LINE POSTS

Line posts (also known as intermediate posts), support the wires on the fence and run between any rise and dip posts. They are ordinary-sized posts strategically spaced to give the fence ground clearance.

Regardless of whether round, half round, or 1/4 round posts, the technique for posting generally remains the same. Good compaction is highly important. The setting of posts depends on the contour of the land; the more undulating the contour the greater the number of posts.

In very hilly country, blading of the proposed line could be a financial advantage as fewer posts would be required.

As posts can vary in length, it is most important to check every post for height before starting to ram the earth around it.

Any post which has an upward lift, should be considered for footing. Posts should be faced neatly to the wire with their straightest portion. Some round posts have cracks, or splits and these should be avoided as a face side.

Avoid any sharp bends in the foot wires at stapled points, as this weakens the wire and it can break under tension.

WIRING

Wiremark-endorsed wire is performance tested for strength and ductility. Using inferior wire products can lead to inconsistencies and handling issues which, in the long run, can lengthen the time taken to erect a fence and is invariably more costly.

Begin wiring at the highest strainer on a hilly contour, as it is easier to drag the wire downhill.

Ensure that you select the correct end of the coil and put it uppermost on the wire dispenser. Remember that the coil must always be dispensed anticlockwise. Dispense in a smooth motion, as any sudden starts and stops can cause the wire dispenser to overrun and drop outside the dispenser's guide arms.

Run out one wire after another and either tie off, or push the ends in the ground when the fence end is reached, to stop it from recoiling.

KNOTS

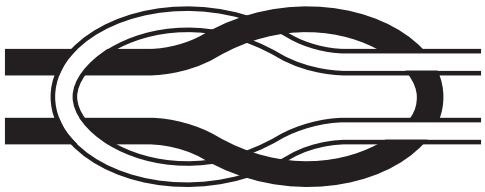

Reef knot

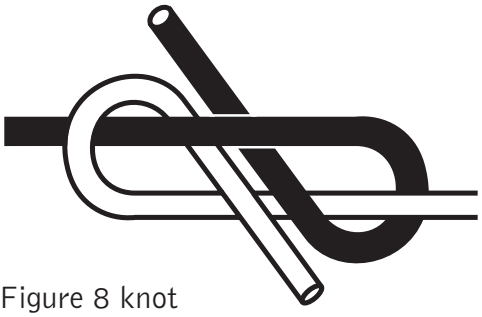

Figure 8 knot

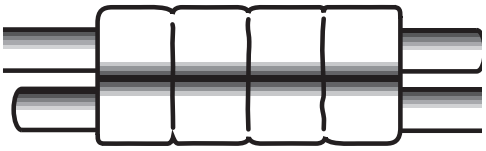

HC2 crimp sleeve

Where two wires join together, a strong and durable knot is needed to ensure that they don't come apart.

There are a variety of knots which can be tied to join a wire. Under laboratory tests, carried out at Pacific Wire, on Wiremark wire, the following results came to light.

	Average breaking strain
Reef Knot	440kgf*
Figure 8 Knot	470kgf
Crimp Sleeve	620kgf
Double Loop	290kgf

(Double Loop should not be used)

*Kgf refers to kilograms of force.

From these results it's clear that the easy-to-tie figure 8 is one of the better knots. After the wires are strained to the correct tension, the surplus wire ends of the knot are wrapped closely along the line wire and broken off close to it. This gives a smooth finish and when done correctly you should be able to run your hand either way along the line wire.

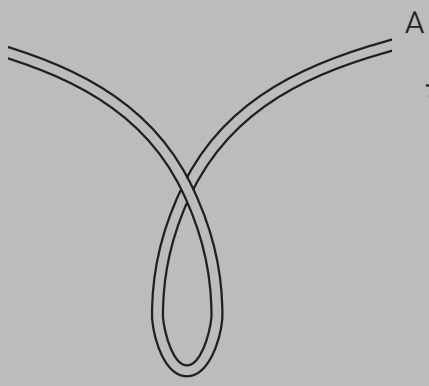

Step 1 –Put a loop in wire A

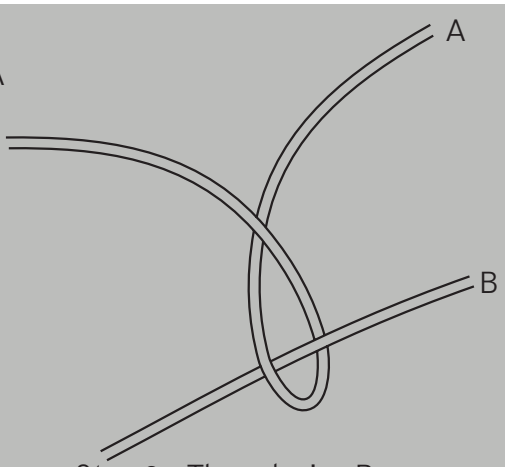

Step 2 –Thread wire B through the loop in A

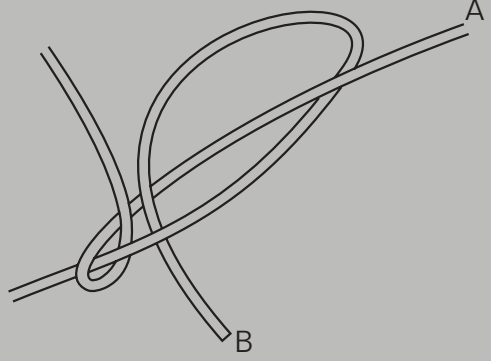

Step 3 –Position B under A and then bend B back over A and under itself

Figure 8 knot

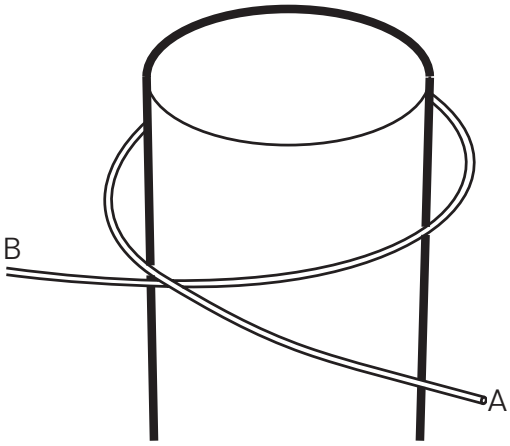

Step 1 –Loop the wire around the strainer

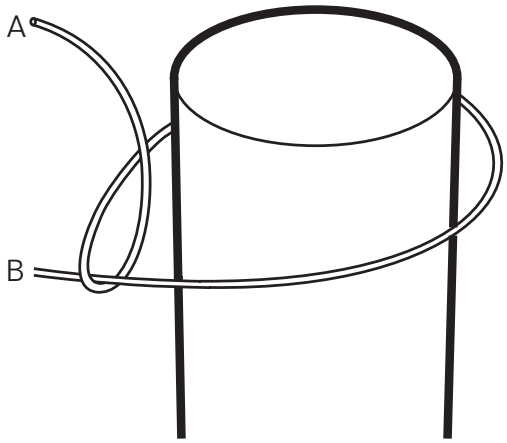

Step 2 –Bend end A around B and back over itself

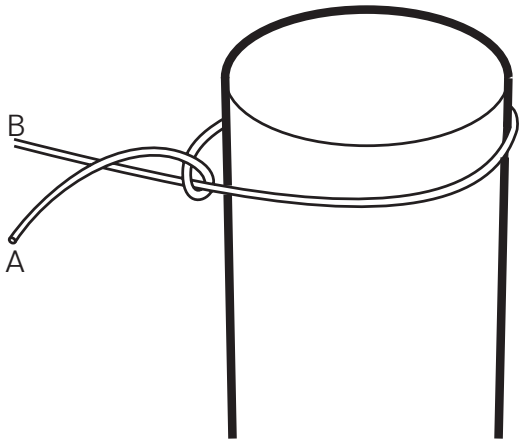

Step 3 –Tighten the loop in A

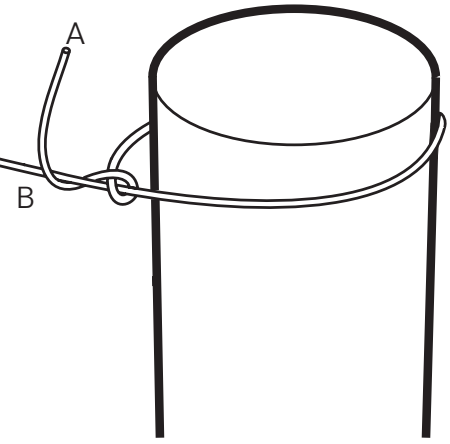

Step 4 –Bend A back under B

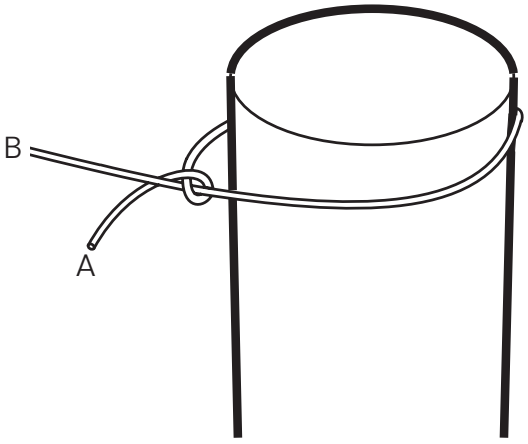

Step 5 –Rotate A around wire B

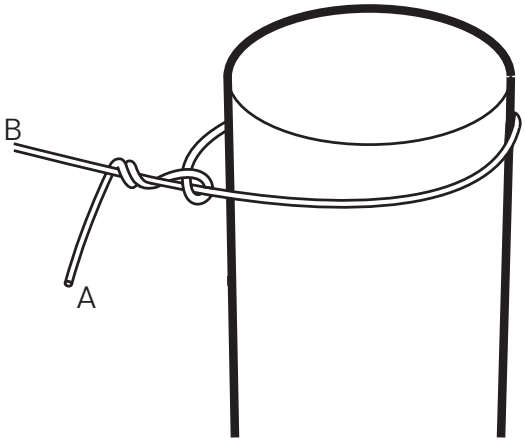

Step 6 –Wrap A around B at least two times, ensuring each loop follows the line of the previous

Strainer tie off

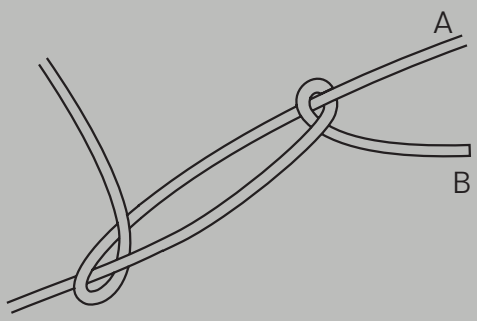

Step 4 –Tighten the loop in B

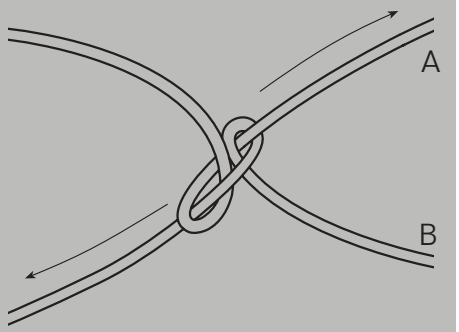

Step 5 –Pull the knot together

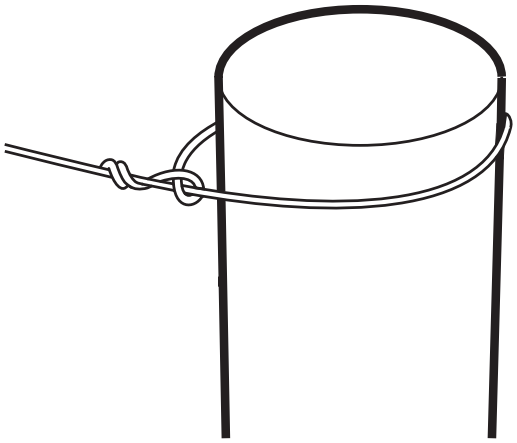

Step 7 –Break off the end of A

STAPLING

Rise and dip posts should be stapled first and the remaining stapled off after tensioning.

Staple at 45˚ to the line of the wire leaving space so you can't quite fit a second wire through. This will allow the wire to feed through the staples when tensioning and prevent wind chatter.

On an angle post, a second staple should be put behind the wire so that the wire slides easily.

On long strains, especially if two or three angles are included, be sure to leave one or two-footed posts unstapled at the farthest end from where you wish to strain. This will ensure an even tension along the entire line.

Once all wires are tied off, stapling of the remaining posts can begin. Start this by walking the entire length of the fence and stapling only secondary foots and rises, as this will even the wire tension.

In sharp dips and rises, two staples are recommended for better holding (as shown in the diagram).

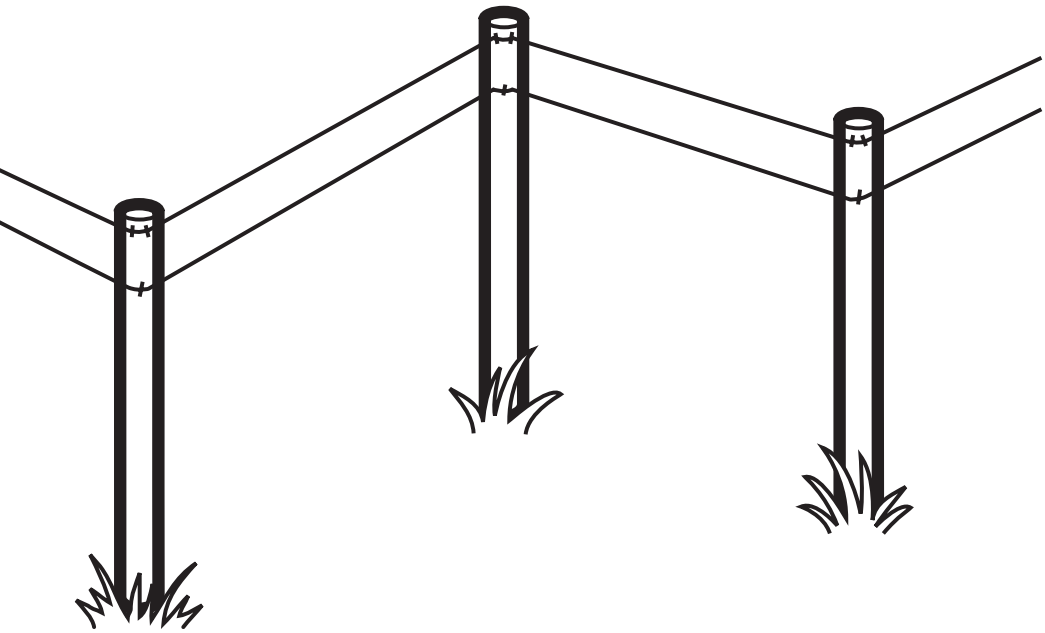

Showing method of double stapling of post wiring in sharp dips and rises. Two staples lessen angle and let wires "feed through" more easily.

STRAINING UP & WIRE TENSIONS

When all the posts along the fence line are in place, and any rise and dip posts have been stapled, tensioning or straining up of the line wires can begin.

Before beginning any straining, the breaking strain of the wire should be noted. These can be found by reading the wire specifications (see back cover). As a general rule, wires should be strained to a quarter of the breaking strain of the wire.

In the example of 2.5mm high tensile wire, the breaking strain is 620kgf*, giving a recommended tension of 150kgf.

Straining from top to bottom is recommended as you will get less sideways movement of posts. Angle posts, stays and stay blocks will also settle quicker, as the leverage at the top of the end strainers and angles is immediate.

Apply the chain wire strainers to the top two wires and draw them to a tension of 340kgf using a wire tension indicator. This is pre-stressing tension only, and will draw the fence wire to the furthermost end, bedding/locking it in on the strainer.

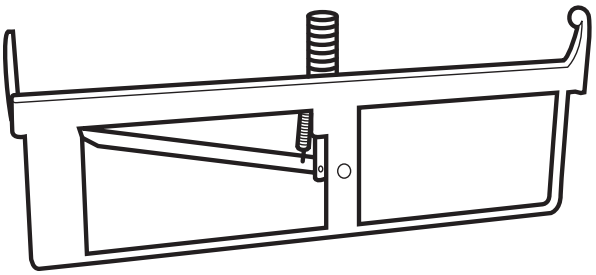

Typical wire tension gauge

Pull it through any staples, which may have been incorrectly driven, or skewed and close up any reef or figure 8 knots which may have been tied.

Now slacken off the top wire until the chain wire strainers are sagging. Then re-tension so that the finished tied off wire is 150kgf, the recommended tension to tie a fence off at.

Remove the chain strainers and pre-stress the No. 3 wire with them.

Slacken No. 2 and re-tension etc. and work down the strainer post from top to bottom.

Staple off the rest of the wires.

Note: Do not have more than two wires at 340kgf at once, as this could be damaging to dip, angle and strainer posts.

*kgf refers to kilograms of force

BATTENING

To ensure that wire spacing remains consistent, and to improve stock retention, wooden battens should be stapled to the fence between any line posts.

The purpose of battens is to maintain wire spacing so that cattle can't push their heads through the fence. Even if posts are three metres apart, at least one batten is desirable.

To ensure even batten spacing between posts, use a length of elastic with the number of battens being used marked upon it. When stretched between posts this will ensure even batten spacing.

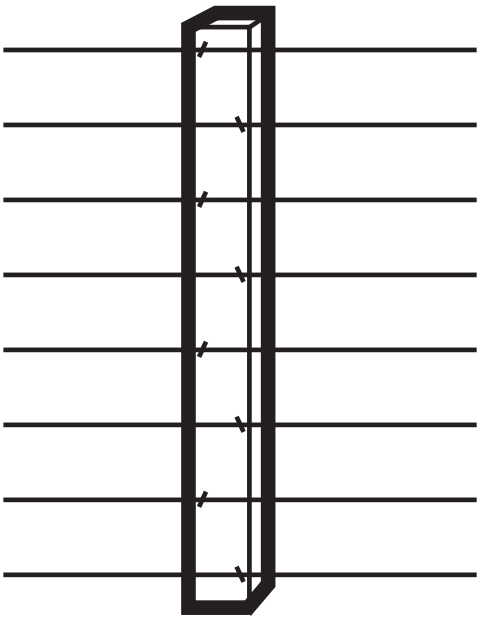

Correct method of stapling battens. Each staple is skewed in alternate directions and also staggered from one side of the batten to the other.

Skewing stops battens sliding along the wires.

Staggering stops battens twisting off wires and also splitting on straight grained timbers.

Place the batten against the wires with about 50mm above the top wire and hold it with some pressure applied with your knee.

Staple the five top wires while holding it in this manner. Check that the batten is at an exact right angle to the wire.

Hang all battens in this method and staple the remaining wires from the opposite side. Staples must be skewed and staggered alternatively. Also they must be driven firmly in, actually causing an impression by the wire in the timber. At no stage should daylight be seen between staple and wire.

Check that all battens are uniform in height above the top wire, but not higher than the posts. Square off battens prior to stapling. If you straighten the batten after stapling, you may need to re-hammer the staples as they may have loosened.

GATES

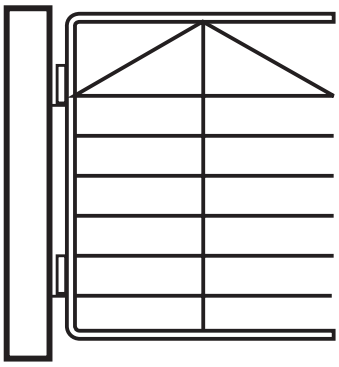

CORRECT

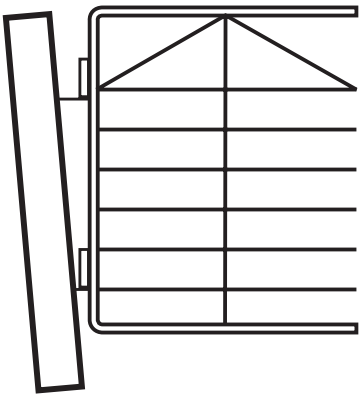

INCORRECT

Hanging gates –Strainer must stand 90° to contour of gateway.

Every effort should be made to have gate tops and strainers level at all times. Correct positioning of strainers in relation to contour is important for successful gate hanging.

The strainer on which the gate is hung must be at right angles to the ground in the gateway. It is possible to hang a gate on sloping ground by observing this rule.

Clamps on steel gates must be as far apart as possible, that is, just below the bend at the top and between the second-to-bottom and the bottom bars.

After these adjustments have been made, stand the gate in the gateway level with the top of the strainer. Check to see the gate is plumb, and then mark just under the eyes of the hinges. If the gate is not plumb, it will either rise or fall as it opens. Where possible, gates should be able to open back against the fence.

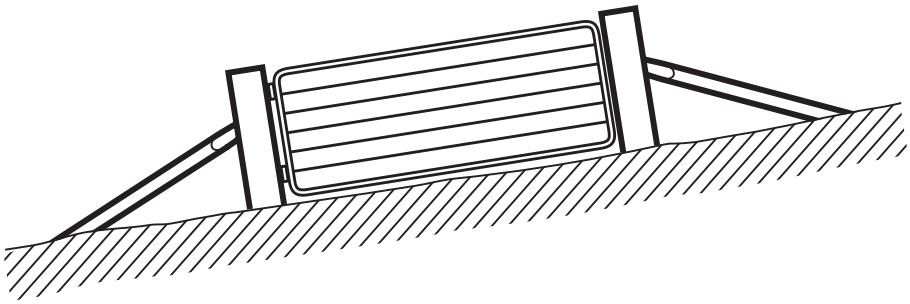

On wooden gates top strap down on top bar. Bottom strap up on bottom bar. Straps MUST be equal distance from upright to hinge eye.

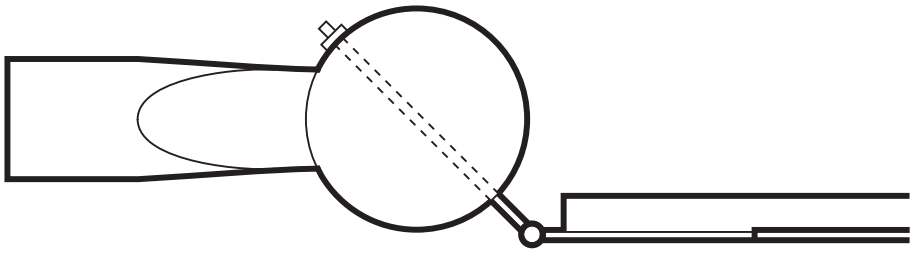

Be careful to position gate so gudgeon is in a position to clear gate on opening and will not become hinge bound.

REPAIRING FENCES

Livestock, weather and human interference can all cause damage to a fence. Repairs to fences are a relatively simple procedure, as quite often only the wires will need to be replaced.

HOW TO REPAIR A BROKEN OR DAMAGED FENCE

First of all assess the damage to the fence and establish at what point the strength of the fence line has been compromised.

Pare back the fence to an appropriate distance from either side of the damaged area.

Replace any damaged posts. Be sure to check the end strainer posts and stays to ensure that their strength hasn't been compromised.

Run out new wires, connecting the new wires with the old wires. This can be done by using a strong knot such as a figure 8.

Strain up each of the new wires, starting from top to bottom.

Re-strain each wire to the correct wire tension. Note: Wires will need to be re-strained together, or at the same time using separate tensioners.

Tie off the wires and replace any battens as required.

ELECTRIC FENCING

The fundamental difference between a traditional fence and an electric fence is the nature of its stock retention. An electric fence relies on a pulse of electricity to retain stock, whereas a traditional fence relies solely on its structure.

Electric fences are generally used on cattle and livestock farms for greater grazing flexibility.

MATERIALS NEEDED

As electric fence construction is relatively similar to normal fence construction, the following is a list of extra components that are needed:

Energiser–The power supply for an energiser can be mains, solar, or battery powered.

Insulators–End and post insulators are required to contain electricity and stop earthing.

Underground cables–Used for gateways to carry on the electricity flow.

Line taps–Connect the wires carrying power through the fence.

On/off switches–Used to isolate sections of the fence.

Earth rod–Used to complete the circuit and should be made of galvanised steel.

For an electric fence to be effective, all wires must be completely insulated and away from the ground.

Wire should be insulated from the strainer with an end insulator.

As the strain of the wire is not crucial to stock retention, it should be tensioned at approximately half the normal tension force (80kgf* for 2.5mm high tensile).

The connector wire between the energiser and the fence should be made of zinc-coated wire wrapped in a high density plastic, or polycoated jacket. It should be connected to the positive side of the electric fence unit and should be placed underground to protect it from cattle damage.

If the energiser is powered by a mains system, this should be set up in an undercover area. If using a battery powered, or solar powered energiser, ensure that it is placed close to the fence line on the opposite side of where livestock is grazing. Both should be installed so that they don't come into contact with the ground, as moisture can cause damage.

Earth rods ensure that the electric circuit is complete. Ideally they would be placed at regular three metre intervals along the fence line.

Where live wires need to be connected to each other, line clamps should be placed across the wire to create a bridge for the electricity to travel over.

Test the current/power of the fence to ensure that you meet the manufacturer's specifications. This can be done using electric fence testers.

Ensure that the on/off switch for the energiser is located somewhere where it can easily be accessed, should the power to the fence need to be cut.

*kgf refers to kilograms of force

HORIZONTAL END ASSEMBLY

Where the soil type is unable to adequately support a stay and stay block a horizontal end assembly can be used.

The main strainer is mechanically driven into the ground. It should be a substantial post, 2400mm in length with an SED of 200mm.

Determine the position of the No. 2 post, which is 2100mm by 150mm SED. This is done by laying the stay, which is 2400mm by 125mm SED, on the ground and allowing for it to overlap both posts by 30–40mm.

Drive the No.2 post into the fence line.

Place the stay across the strainer and No.2 post so that it sits centre on both and 30–40mm from the edge.

Mortice the stay into both posts to give it maximum bearing surface. It should be positioned with a flush fit, as this will ensure that the stay does not penetrate the posts. The stay should sit 75mm from the top of the strainer and No. 2 posts.

NOTE: The point where the stay meets the post are considered to be the compression joint, so it is very important to ensure that it is morticed correctly.

THE BRACE WIRE

Before bracing, check that all posts are positioned correctly and at the right depth.

Choosing the right wire and correct installation is crucial. Wiremark zinc aluminium 2.5mm HT wire is ideal, as its strength and ductility suits the application.

To apply the brace wire you will need three continuous loops of wire. These should be placed in line and over the top of each other starting from the bottom back of the strainer and going to the top back of the No. 2 post.

First, half-drive one staple horizontally at the back of the strainer and approximately 100mm from the ground. Then half-drive another staple 75mm down from the top back of the No. 2 post to support the wires.

Place wire strainers on either end of the wire that makes up the three continuous loops, and tighten. Use your hand to occasionally work the wire out evenly.

During tensioning, lay the strainer back enough to allow for loading/tension on the line wires. This will happen as the brace wire is tightened.

To tie off the brace wires, use a non-slip wire joint or a crimp sleeve, as this will maintain the full strength of the brace and ensure that no tension is lost. Before tying, the strainer should be laid back approximately 25mm to allow for movement.

Finally, adjust any staples, ensuring that the wire can still move freely through them and support the loop wires in their intended position.

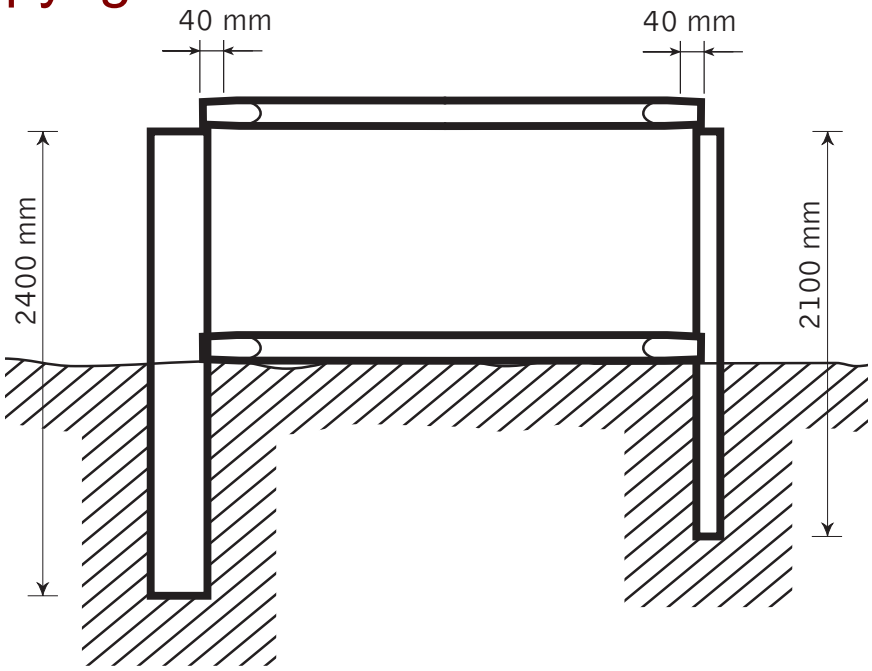

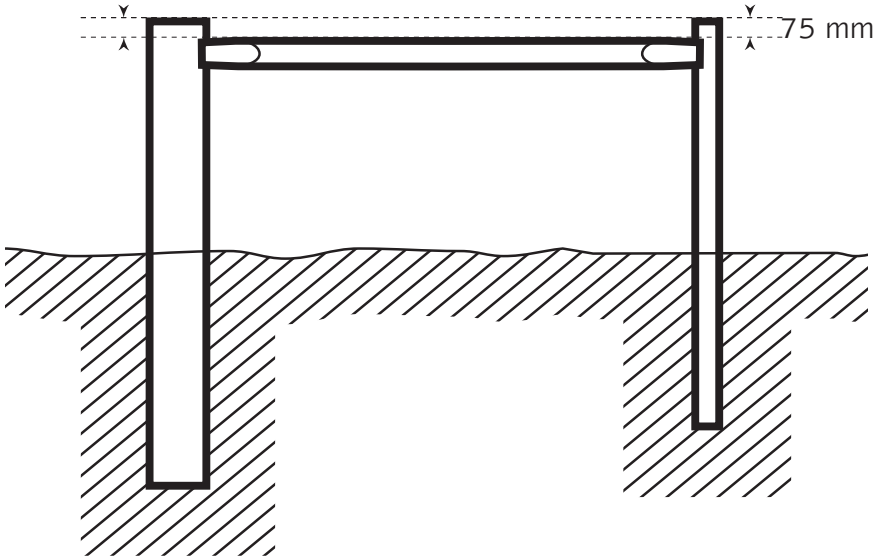

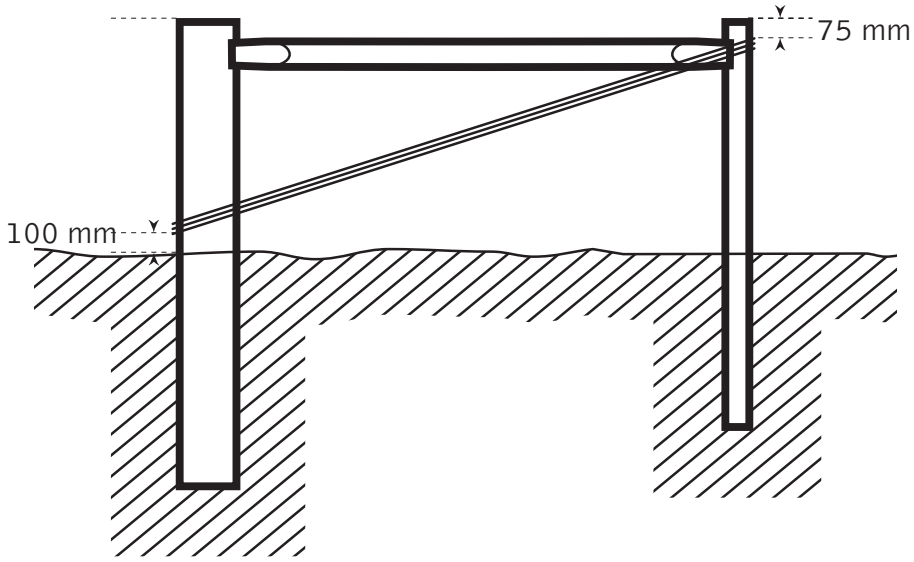

GLOSSARY

Angle post–These posts are used to define a change in the direction of a fence. They are a more substantial post that is stayed for extra support.

Battening–This refers to the stapling of wooden battens to the fence between line posts to retain wire spacing and improve stock retention.

Bevel–The bevel (or chamfer) is used to take the sharp edges off the post tops.

Blading/Ground clearance–This is the levelling of ground contour before fence construction, which helps to keep the wires clear off the ground. This is usually done with bulldozers.

Dip posts–These posts define the gullies or low points in the fence line. They are usually footed as they are holding the fence down and are subject to lifting.

Foot–The piece of wood placed at the bottom of strainer posts to add strength and prevent twisting and lifting of the post when under pressure. The size of the foot needed will vary depending on ground conditions and soil types. Foots are also used to secure dip posts.

Gudgeons–These are used to fix and support a gate to the strainer post.

Guide wire–This defines the line of the fence during construction. It is a wire that runs from one end of the fence to the other end and around any angle posts.

Jenny–Wire dispenser used to reel out or 'pay out' wire along the fence line.

Line posts–These are 'intermediate posts' that are placed between the strainer, rise and dip posts to hold the fence and wires upright.

Line wires–These are the main fence wires put onto the fence during construction. The quantity of line wires can vary depending on the fence's purpose.

Mortice–This is the chiselled out area and support joint where the stay is joined to a strainer post. It adds extra support.

Ramming–Refers to the method used to secure the strainer and angle posts in the ground. It involves compacting of soil, sub-soil and top soil around the post and footing.

Rise posts–These posts define the high points or rises in the fence line and are usually only needed where there is hilly contour.

Rotating–Refers to the turning or twisting of the post in the hole, which is detrimental to the fence. It can be corrected with footing.

SED–Small end diameter.

Stay–This post is used to support the strainer and angle posts against the strain of the line wires. It runs on an angle from the upper end of the post to the ground.

Stay block–This is the block (sometimes referred to as the dead man) that the stay rests on. It works by giving the stay a greater bearing surface in the ground.

Strainer–This is the end post (main post) of the fence and the main strain carrier of the wires.

Tensioning–This refers to the tightening of the wires on the fence.

Tying off–This is done after the tensioning of the wires has been done and refers to the tying of wires to the end strainer post.

Wire gauge–Refers to the size and the diameter of the wire.

Wire gauging–Refers to the wire spacing on the fence.

NOTES

WIREMARK® FENCING WIRE REFERENCE TABLE

Diameter US GAUGE	mm	Minimum length 25kg coil (nominal weight) feet	metres	Min breaking load kg force	Recommended tension kg force	Min Zinc Weight g/m²	Min Zinc-Aluminium g/m²
High Tensile							
16	1.60	5197	1584	220	80	200	
14	2.00	3323	1013	395	110	215	
12.5	2.50	2126	650	620	150	260	4 life 260 2 life 130
10.75	3.15	1339	408	835	200	240	
9.75	3.55	1053	321	1225	250	250	
8	4.00	830	253	1405	300	260	
Extra Heavy High Tensile							
10.75	3.15	1339	408	365	150	360	
Soft Wire or Low Tensile							
14	2.00	3323	1013	140	65	240	
12.5	2.50	2126	648	215	80	260	
10.75	3.15	1339	408	365	150	275	
9.75	3.55	1053	321	460	200	275	
8	4.00	830	253	590	250	290	
7	4.50	656	200	745	315	290	


WIREMARK®
New Zealand Made.

CHOOSING THE RIGHT WIRE

Application	Recommended wire	
	High tensile	Soft/Low tensile
Electric fencing	1.60 mm, 2.00 mm, 2.50mm	2.50mm
Lead out wires (for electric fencing)	2.50mm and 3.15mm	
Coastal, corrosive situations	Zinc Aluminium Alloy coated–2.50mm, 3.15mm	Zinc Aluminium Alloy coated–3.15mm, 4.00mm
Brace wires in end assemblies	2.50mm, 3.15mm, 4.00mm	
Support wires in overhead irrigation systems	1.60mm, 2.00mm	
Training wires and overhead support wires for orchard applications	2.50mm and 3.15mm	
Tieback, artificial shelter applications and canopy support wires	3.55mm, 4.00mm	
Temporary electric and strip		1.60mm, 2.00mm
Tying and lacing wire		2.50mm
Horse containment		4.00mm
Footing wire		4.50mm

Brought to you by the good people at:
See WWW.WIREMARK.CO.NZ for more information and to buy your WIREMARK® wire.

WIREMARK®

THE ONLY 100% NEW ZEALAND MADE FENCING WIRE